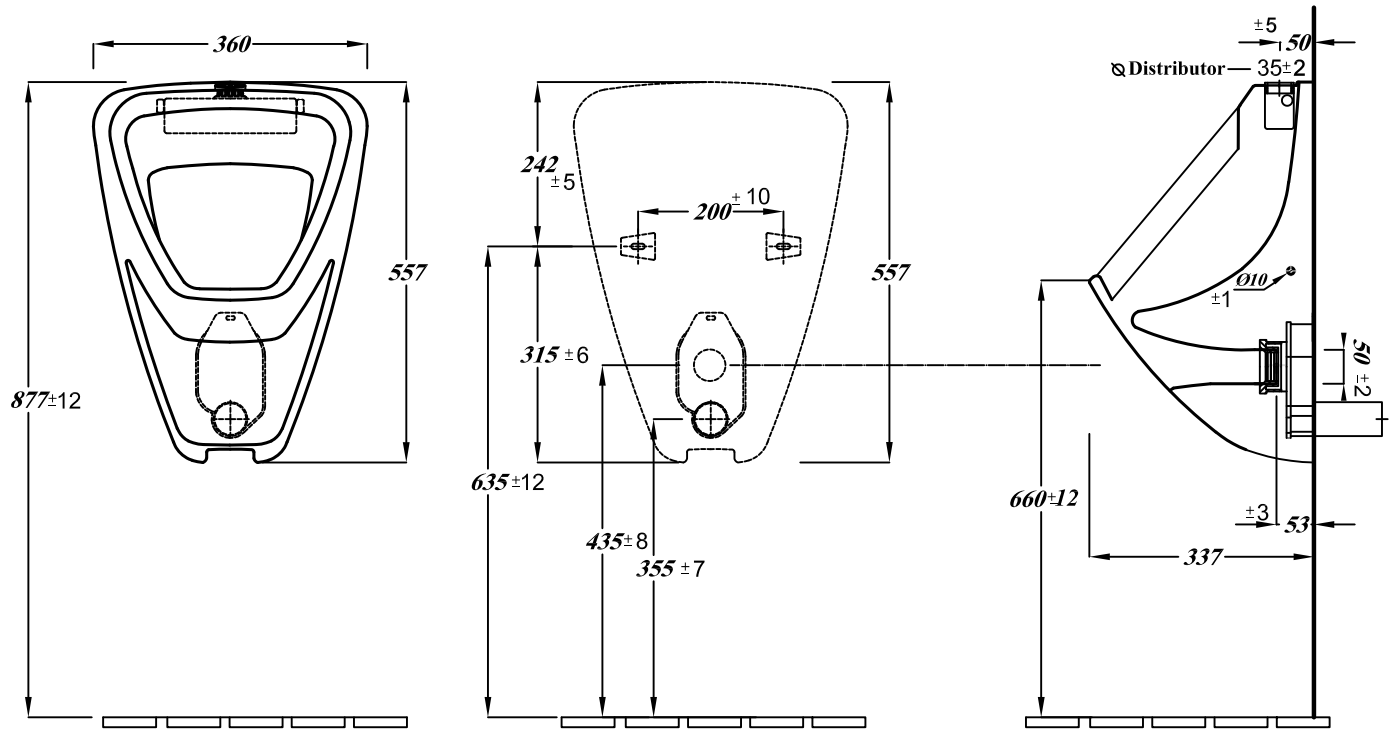

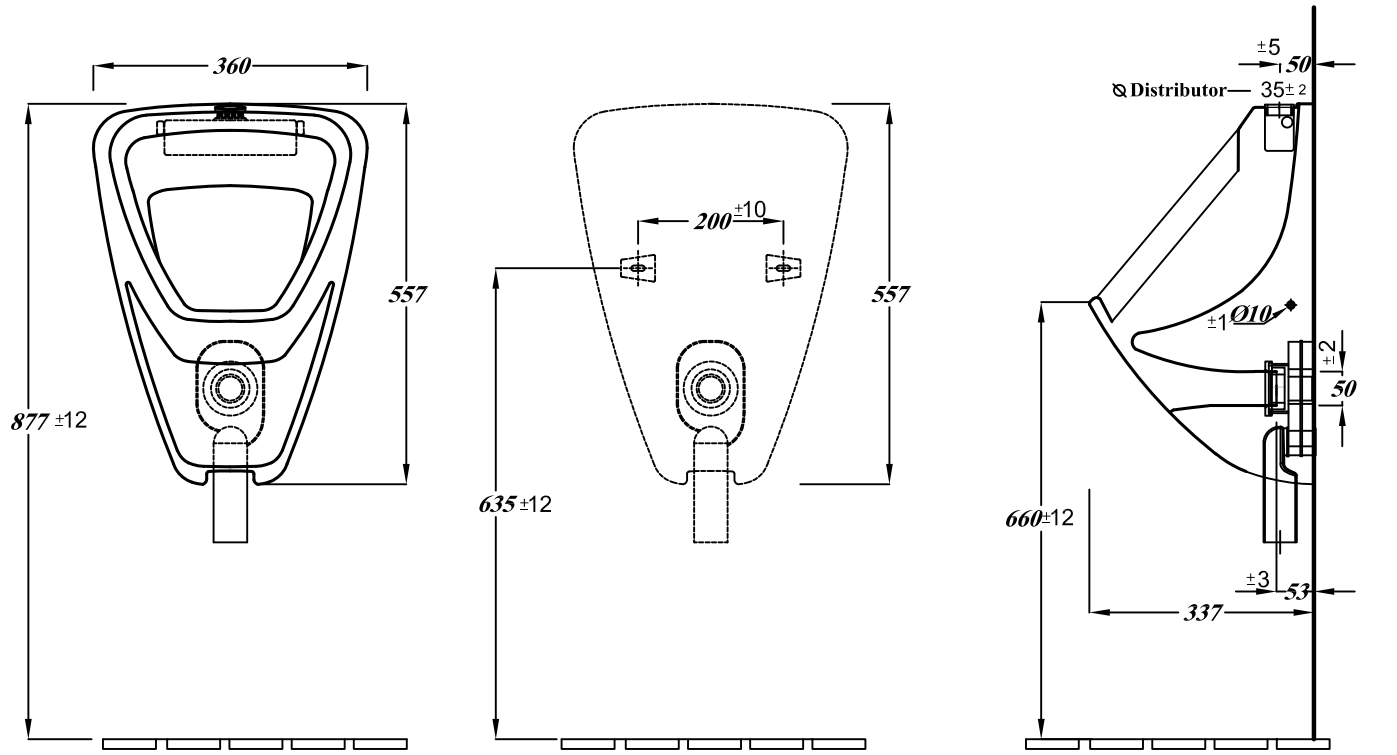

Disclaimer:
-Fixture dimensions are nominal and conform to tolerances as per European Norms.
-This drawing may not be copied or passed on to a third party without our permission.
-Lecico accepts no liability whatsoever for this data and technical drawings. Other parties use them at their own risk.
-The dimensions indicated are not binding, Lecico reserves the right to make product / drawings changes without prior notice.

Revision No .	Reason .	Date Of Rev .
0	Initial Issue .	13/3/2016
1	Updated dimensions and tolerances based on recent statistics.	5/2/2017

Lecico	Atlas Geo Urinal Top Inlet With Belt (Provisional Drawing)	Scale : 1:10	Drawing No.:0001121